SIEMENS

Data sheet 3SB3400-1RB

ACTUATOR-/INDICATOR COMPONENT WITH INTEGRATED LED 230V AC LAMP HOLDER SCREW TERMINAL RED !!! Phased-out product !!! SIRIUS ACT 3SU1 is successor Preferred successor type is >>3SU1401-1BF20-1AA0<<

Figure similar

Product designation	lampholder

Contact block/ lampholder	
Mounting type	integrated
Number of lampholders	1

General technical data	
Product function	
• positive opening	No
Product component	
• diode	Yes
• lamp transformer	No
• Light source	Yes
• series resistor	No
Insulation voltage	
• rated value	250 V
Degree of pollution	class 3
Type of voltage	
• of the operating voltage	AC

Subject to change without notice
© Copyright Siemens

Surge voltage resistance rated value	4 kV
Protection class IP	
• of the enclosure	IP40
• of the terminal	IP20
Reference code acc. to DIN 40719 extended according to IEC 204-2 acc. to IEC 750	H
Reference code acc. to DIN EN 81346-2	P
Reference code acc. to DIN EN 61346-2	P
Operating voltage 1	
• at AC	
— at 50 Hz rated value	230 V
— at 60 Hz rated value	230 V

Supply voltage

Type of voltage of the supply voltage	
• of the light source	AC
Supply voltage of the light source at AC	
• at 50 Hz rated value	230 V
• at 60 Hz rated value	230 V
Relative negative tolerance of the supply voltage	-15 %
Relative positive tolerance of the supply voltage	10 %

Auxiliary circuit

Number of NC contacts for auxiliary contacts	0
Number of NO contacts for auxiliary contacts	0
Number of CO contacts	
• for auxiliary contacts	0
Consumed current for rated value of supply voltage maximum	17 mA

Connections/ Terminals

Type of electrical connection	screw-type terminals
Type of connectable conductor cross-sections	
• for auxiliary contacts	
— solid	2x (1.0 ... 1.5 mm²)
— solid with core end processing	2x (0.5 ... 0.75 mm²)
— finely stranded with core end processing	2x (0.5 ... 1.5 mm²)
• at AWG conductors for auxiliary contacts	2x (18 ... 14)
Tightening torque	
• for auxiliary contacts with screw-type terminals	0.8 N·m

Lamp

Type of light source	LED
Color of the light source	red

Ambient conditions

Subject to change without notice
© Copyright Siemens

Ambient temperature	
• during operation	-25 ... +70 °C
• during storage	-25 ... +80 °C

Installation/ mounting/ dimensions

Mounting type	front mounting
Height	36 mm
Width	10 mm
Depth	20 mm

Certificates/ approvals

General Product Approval				Declaration of Conformity	
CCC	CSA	UL		EG-Konf.	Miscellaneous

other	Railway
Confirmation	Special Test Certificate

Further information

Information- and Downloadcenter (Catalogs, Brochures,…)
https://www.siemens.com/ic10

Industry Mall (Online ordering system)
https://mall.industry.siemens.com/mall/en/en/Catalog/product?mlfb=3SB3400-1RB

Cax online generator
http://support.automation.siemens.com/WW/CAXorder/default.aspx?lang=en&mlfb=3SB3400-1RB

Service&Support (Manuals, Certificates, Characteristics, FAQs,...)
https://support.industry.siemens.com/cs/ww/en/ps/3SB3400-1RB

Image database (product images, 2D dimension drawings, 3D models, device circuit diagrams, EPLAN macros, ...)
http://www.automation.siemens.com/bilddb/cax_de.aspx?mlfb=3SB3400-1RB&lang=en

Subject to change without notice
© Copyright Siemens

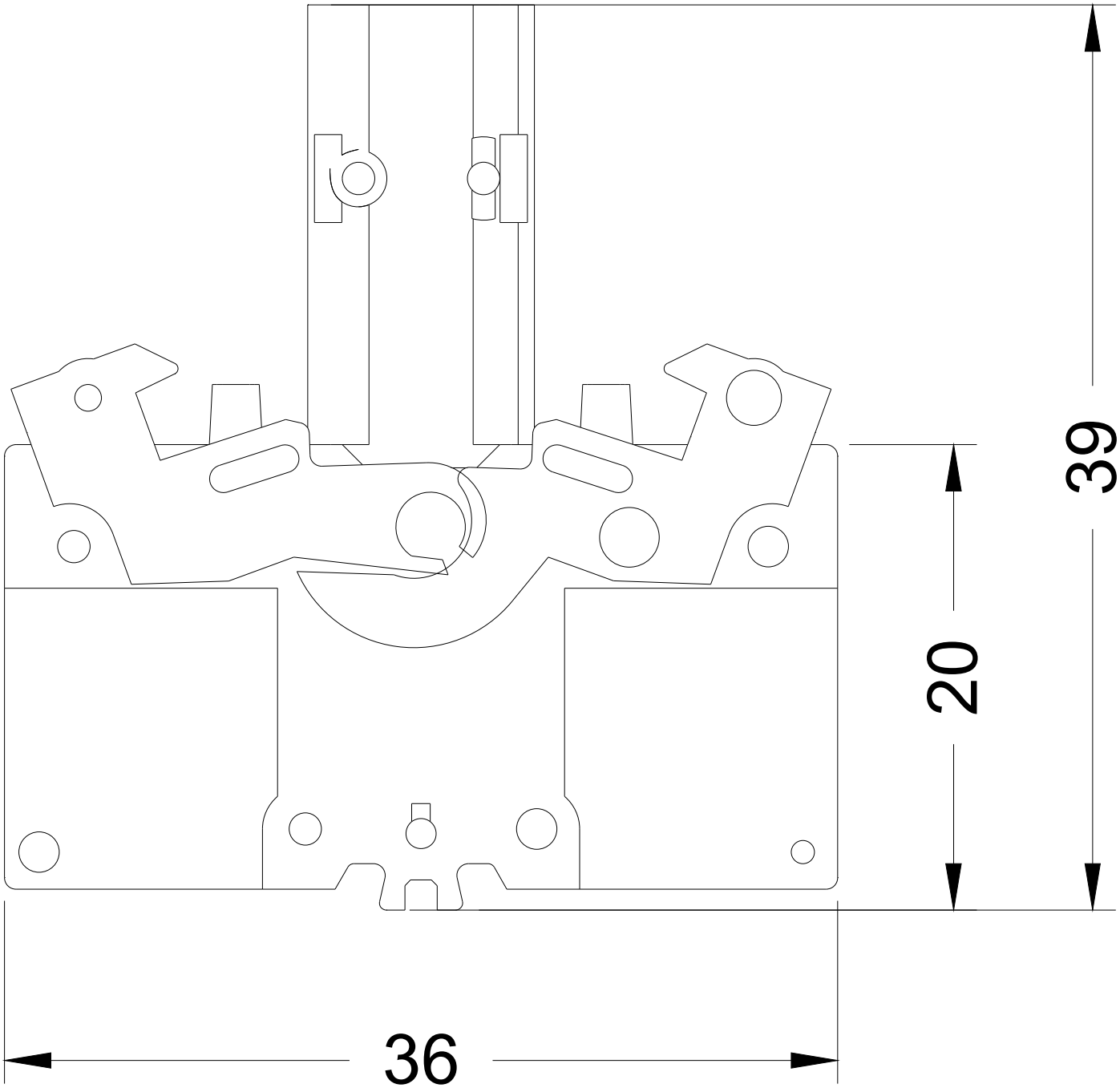

Subject to change without notice
© Copyright Siemens

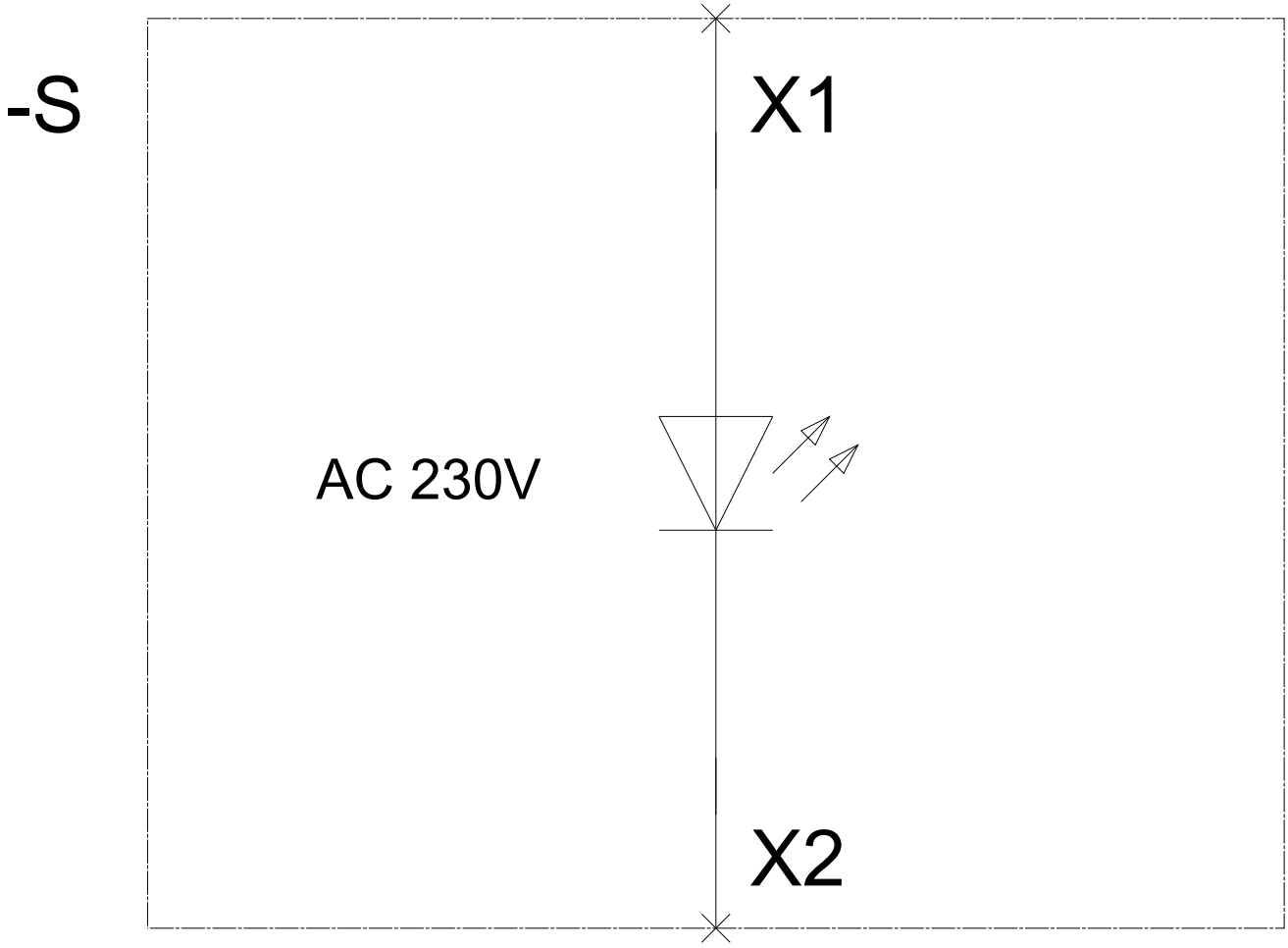

last modified: 05/15/2020

Subject to change without notice
© Copyright Siemens