SIEMENS

Data sheet 3SB3644-6BA20

INDICATOR LIGHT, 22MM, ROUND, METAL, RED, LENS, CONCENTRIC RINGS, WITH HOLDER, LAMPHOLDER, WITH INTEGRATED LED AC/DC 24V, SCREW CONNECTION

Figure similar

Design of the product	Complete unit round
Enclosure	
Shape of the enclosure front	round
Material of the enclosure	metal
Number of command points	0
Actuator	
Design of the operating mechanism	indicator light
Product extension optional Light source	Yes
Color	
• of the actuating element	Red
Shape of the actuating element	Concentric rings
Type of unlocking device	without
Number of switching positions	0
Front ring	
Product component front ring	No
Holder	

Subject to change without notice
© Copyright Siemens

Material of the holder	Metal

Contact block/ lampholder

Mounting type	integrated LED
Number of lampholders	1
Number of switching elements	0

General technical data

Product function	
• positive opening	No
Product component	
• Light source	Yes
Protection class IP	IP67
Vibration resistance	
• acc. to IEC 60068-2-6	20 ... 200 Hz: 5g
Equipment marking	
• acc. to DIN 40719 extended according to IEC 204-2 acc. to IEC 750	H
• acc. to DIN EN 61346-2	P
• acc. to DIN EN 81346-2	P

Supply voltage

Type of voltage of the supply voltage	
• of the light source	AC/DC
Supply voltage 1 of the light source at AC	
• at 50 Hz rated value	24 V
• at 60 Hz rated value	24 V
Supply voltage 1 of the light source at DC	
• rated value	24 V
Relative negative tolerance of the supply voltage	-15 %
Relative positive tolerance of the supply voltage	10 %

Auxiliary circuit

Number of NC contacts	
• for auxiliary contacts	0
Number of NO contacts	
• for auxiliary contacts	0
Number of CO contacts	
• for auxiliary contacts	0
Consumed current for rated value of supply voltage maximum	18 mA

Connections/Terminals

Type of electrical connection	screw-type terminals
Tightening torque of the screws in the bracket	1.4 ... 1.6 N·m

Subject to change without notice
© Copyright Siemens

Ambient conditions

Ambient temperature	
• during operation	-25 ... +70 °C
• during storage	-40 ... +80 °C
Environmental category during operation acc. to IEC 60721	3K6

Installation/ mounting/ dimensions

Mounting type	front mounting
Shape of the installation opening	round
Mounting diameter	22 mm
Mounting height	11 mm
Installation width	28 mm
Installation depth	49 mm

Accessories

Product component holder for 3 switching elements	No

Certificates/approvals

General Product Approval				Declaration of Conformity	Test Certificates
CCC	CSA	UL	EAC	EG-Konf.	Special Test Certificate

Marine / Shipping				other	
ABS	LRS	PRS	RINA	Confirmation	Miscellaneous

other
Environmental Confirmations

Further information

Information- and Downloadcenter (Catalogs, Brochures,…)
http://www.siemens.com/industrial-controls/catalogs

Industry Mall (Online ordering system)
https://mall.industry.siemens.com/mall/en/en/Catalog/product?mlfb=3SB3644-6BA20

Cax online generator
http://support.automation.siemens.com/WW/CAXorder/default.aspx?lang=en&mlfb=3SB3644-6BA20

Subject to change without notice
© Copyright Siemens

Service&Support (Manuals, Certificates, Characteristics, FAQs,...)
https://support.industry.siemens.com/cs/ww/en/ps/3SB3644-6BA20

Image database (product images, 2D dimension drawings, 3D models, device circuit diagrams, EPLAN macros, ...)
http://www.automation.siemens.com/bilddb/cax_de.aspx?mlfb=3SB3644-6BA20&lang=en

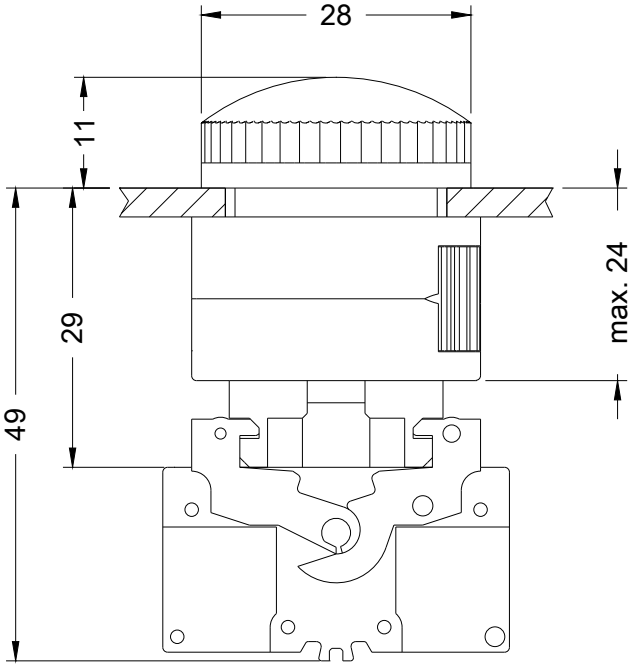

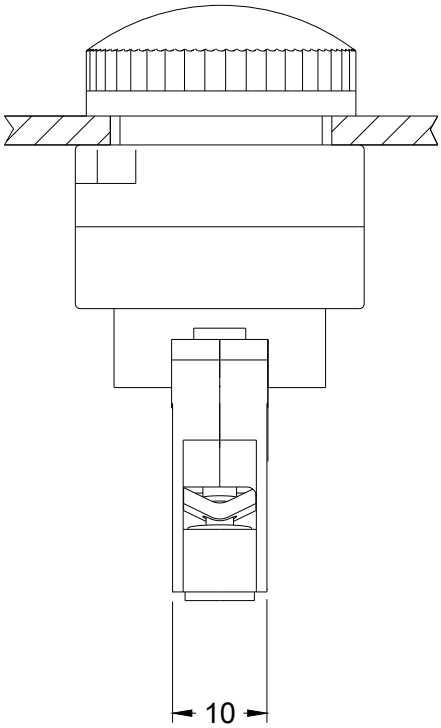

last modified: 09/25/2017

Subject to change without notice
© Copyright Siemens